Data Sheet

Article number: 03705008
Description: Fluro rod end BRM 8 L
threaded left with ball bearing

Measures

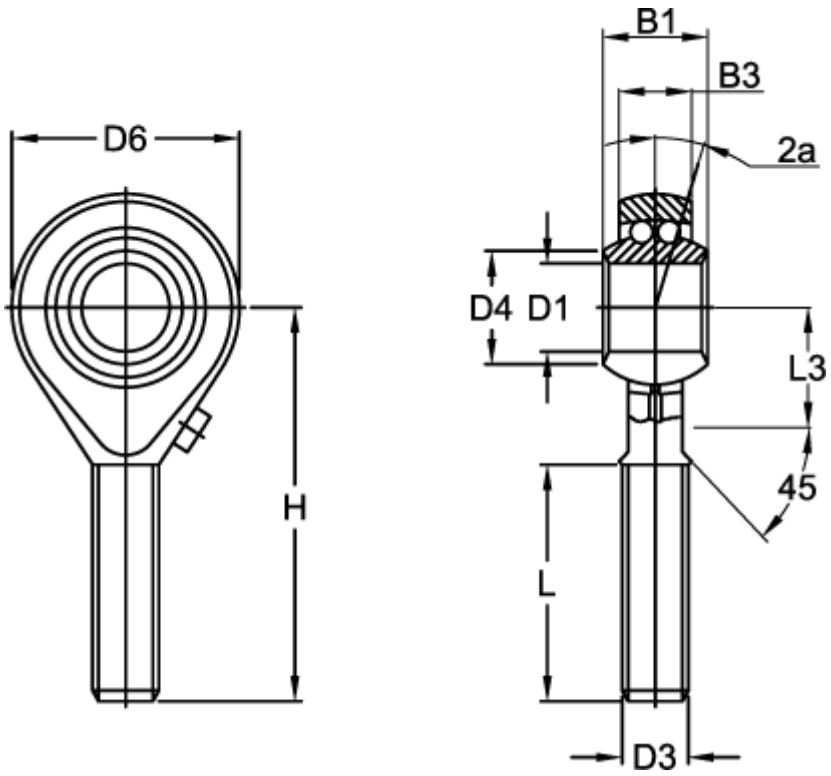

Angel 2a	= 8.5	H	= 42
B1	= 12	L	= 25
B3	= 9.00	L3	= 15
D1	= 8	Max rpm	= 1300
D3	= M8x1,25	Static load (N)	= 1000
D4	= 10.5	Weight (kg)	= 0.036
D6	= 24		
Dynamic load C (N)	= 4000.0		

Product drawings and brochures of any kind may contain errors for which Brd. Klee A/S cannot be liable.